ST750A

Adjustable step-down, current-mode PWM DC-DC converters

Features

- Up to 450mA load currents
- 200kHz high-frequency current-mode PWM
- 85% to 96% efficiencies
- 33mH or 100mH pre-selected inductor value, no component design required
- 0.8mA quiescent current
- 0.3µA shutdown supply current
- Adjustable output voltage
- Overcurrent, soft-start and undervoltage lockout protection
- Cycle-by-cycle current limiting
- Package available: SO-8

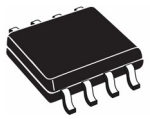

SO-8

Description

The ST750A is an adjustable output CMOS, step-down switching regulator. The ST750A accepts inputs between 4V and 11V and delivers 450mA. Typical efficiencies are 85% to 96%.

Quiescent supply current is 0.8mA and only 0.3mA in shutdown mode. The output does not exhibit frequency over this specified range. Pulse-width modulation (PWM) current-mode control provides precise output regulation and excellent transient responses. Output voltage accuracy is guaranteed to be ±4.5% plus feedback resistor tolerance over line, load, and temperature variations.

Fixed-frequency switching and absence of sub-harmonic ripple allows easy filtering of output ripple and noise, as well as the use of small external components. This regulators require only a single inductor value to work in most applications, so no inductor design is necessary. Typical applications are: Cellular phones & radios, portable Instruments, Portable Communications Equipment and Computer Peripherals.

Obsolete Product(s) - Obsolete Product(s)

Order code

Part number	Packaging
ST750AC	ST750ACDTR

Contents

1 Diagram 3

2 Pin configuration 4

3 Maximum ratings 5

4 Typical application 6

5 Electrical characteristics 7

6 Typical performance characteristics 8

7 Package mechanical data 10

8 Revision history 13

Obsolete Product(s) - Obsolete Product(s)

1 Diagram

Figure 1. Schematic diagram

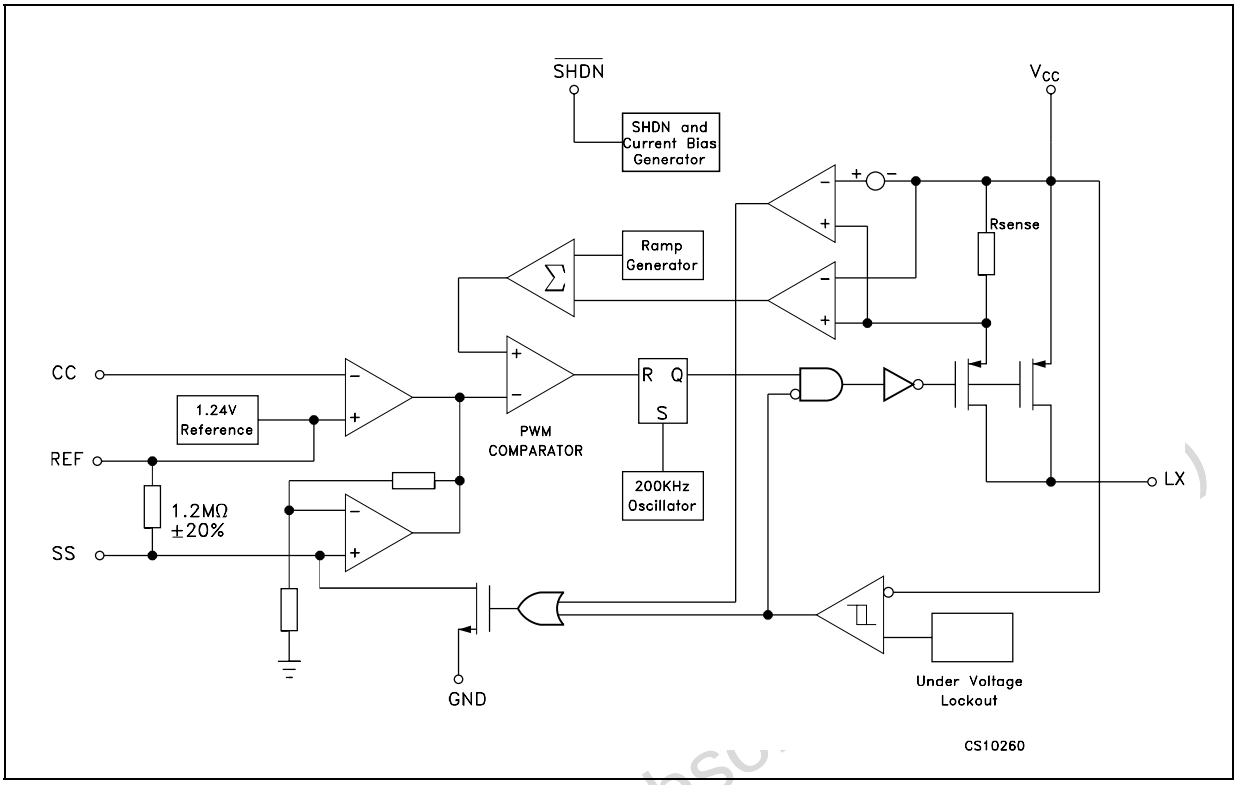

Obsolete Product(s) - Obsolete

2 Pin configuration

Figure 2. Pin connections (top view)

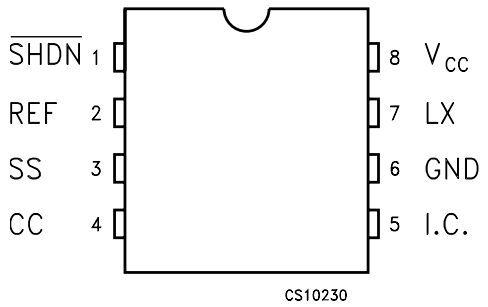

Table 1. Pin description

Pin N°	Symbol	Name and function
1	$\overline{SHDN}$	Shutdown control (active low): If connected to GND the IC is in shutdown. Connect to V_{CC} for normal operation (ON MODE)
2	REF	Reference output voltage: (1.25V): Bypass to GND with a capacitor that does not exceed 47nF
3	SS	Soft start: a capacitor between SS and GND provides soft-start and short-circuit protections.
4	CC	Compensation capacitor input: externally compensates the outer (voltage) feedback loop. Connect to OUT with 330pF capacitor
5	IC	Internal connection: make no external connection to this pin
6	GND	Ground
7	LX	Switch output. Drain of internal P-channel power MOSFET
8	V_{CC}	Supply voltage input. Bypass to GND with 1µF ceramic capacitance and large value electrolytic capacitor in parallel. The 1µF capacitor must be as close as possible to the GND and V_{CC} pins

Obsolete Product(s) - Obsolete Product(s)

3 Maximum ratings

Table 2. Absolute maximum ratings

Symbol	Parameter		Value	Unit
V_{CC}	DC Input voltage		-0.3 to 12	V
V_{LX}	Switch pin voltage		-0.3 to (V_{CC} + 0.3)	V
V_{SHDN}	Shutdown voltage (SHDN)		-0.3 to (V_{CC} + 0.3)	V
V_S,V_C	Soft start (SS) and compensation capacitor (CC) pins voltage		-0.3 to (V_{CC} + 0.3)	V
I_{LX}	Switching peak current		2	A
I_{REF}	Reference current		2.5	mA
P_{TOT}	Continuous power dissipation at T_A=70°C	SO-8	344	mW
T_{stg}	Storage temperature range		-40 to +150	°C
T_{op}	Operating junction temperature range	C series	0 to +70	°C

Note: Absolute Maximum Ratings are those values beyond which damage to the device may occur. Functional operation under these condition is not implied

Table 3. Thermal data

Symbol	Parameter	SO-8	Unit
R_{thJA}	Thermal resistance junction-ambient (1)	160	°C/W

1. This value depends from thermal design of PCB on which the device is mounted.

Obsolete Product(s) - Obsolete Product(s)

4 Typical application

Figure 3. Application circuit

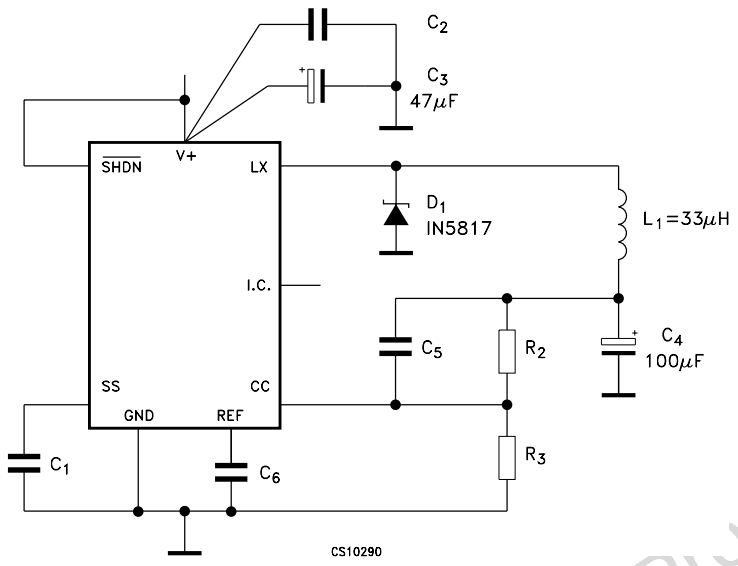

Obsolete Product(s) - Obsolete Product(s)

5 Electrical characteristics

Table 4. Electrical characteristics (V_{CC}=5V, I_O = 0mA, T_A = T_{MIN} to T_{MAX}, unless otherwise specified).

Symbol	Parameter	Test conditions	Min.	Typ.	Max.	Unit
V_{CC}	Input voltage		4		11	V
V_O	Output voltage	V_{CC} = 6 to 11V, I_O = 0 to 450mA	4.75	5	5.25	V
ΔV_O	Line regulation	V_{CC} = 4 to 11V		0.15		%/V
ΔV_O	Load regulation	I_O = 0 to 450mA		0.005		%/mA
η	Power efficiency	I_O = 300mA		92		%
I_{SUPPLY}	Supply current	ON Mode		0.8	2.5	mA
		OFF Mode, $\overline{SHDN}$ = 0		0.3	100	µA
V_{IH}	SHDN Input high threshold		2			V
V_{IL}	SHDN Input low threshold	V_{CC} Falling			0.25	V
I_{SHDN}	Shutdown input leakage current	I_{LX} = 500mA			1	µA
V_{LOCK}	Under voltage lockout	V_{CC} = 12V, V_{LX} = 0V		2.7	3	V
$R_{DS(on)}$	LX On resistance	T_A = 25°C		0.5		Ω
I_{LX}	LX Leakage current			1		µA
V_{REF}	Reference voltage		1.17	1.24	1.31	V
ΔV_{REF}	Temperature reference drift			50		ppm/°C
f_{OSC}	Switching frequency	C series	160	200	280	KHz
R_C	Compensation pin impedance			7500		Ω

Obsolete Product(s) - Obsolete Product(s)

6 Typical performance characteristics

(Unless otherwise specified T_J = 25°C)

Figure 4. Efficiency vs output current

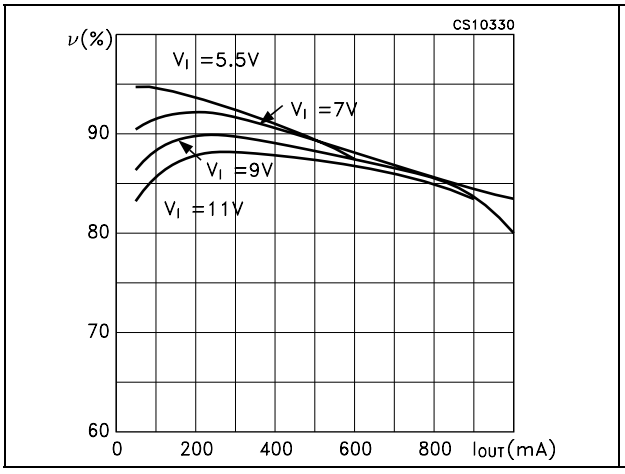

Figure 5. Supply current vs temperature

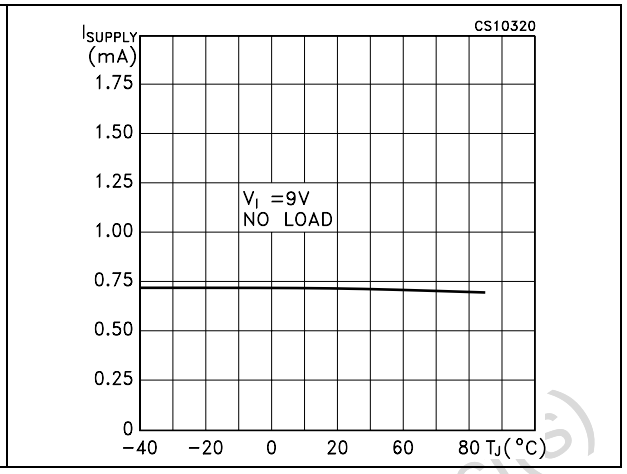

Figure 6. Oscillator frequency vs temp.

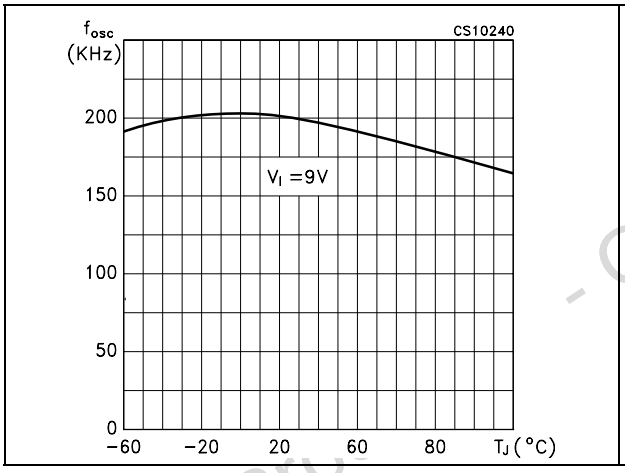

Figure 7. Oscillator frequency vs input volt.

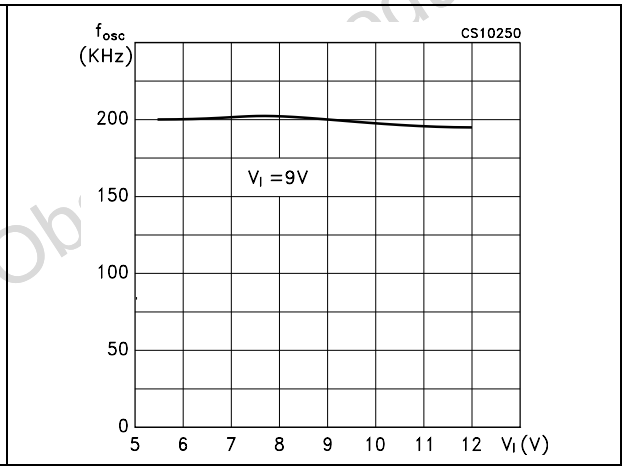

Figure 8. Peak inductor current vs out. curr.

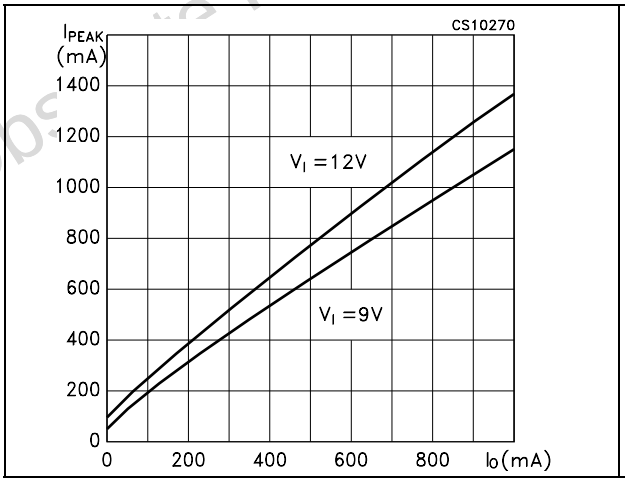

Figure 9. Output voltage vs output current

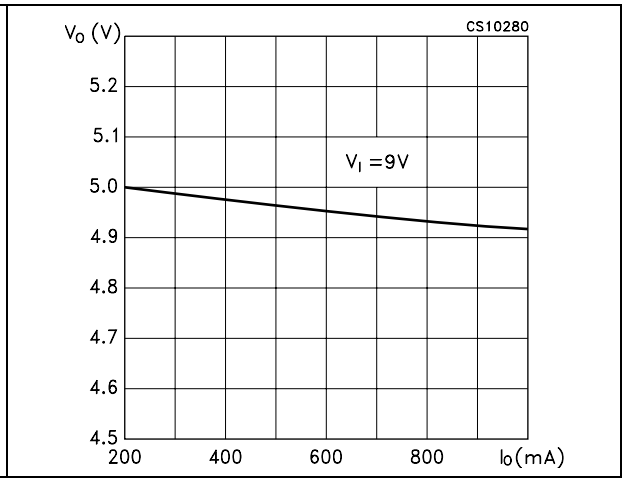

Figure 10. Switching waveforms, continuous conduction

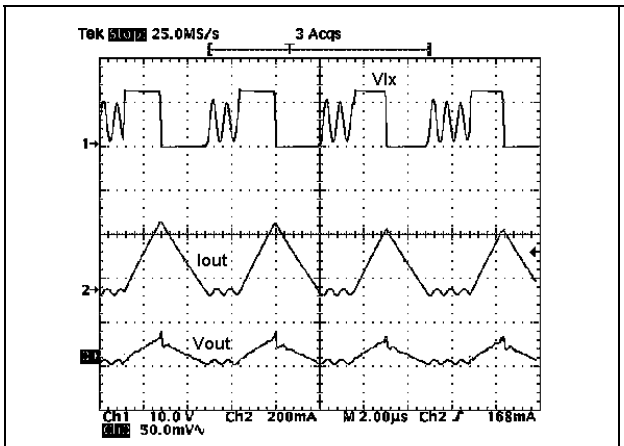

V_I = 6V to 11V, I_O = 300mA

Figure 11. Switching waveforms, discontinuous conduction

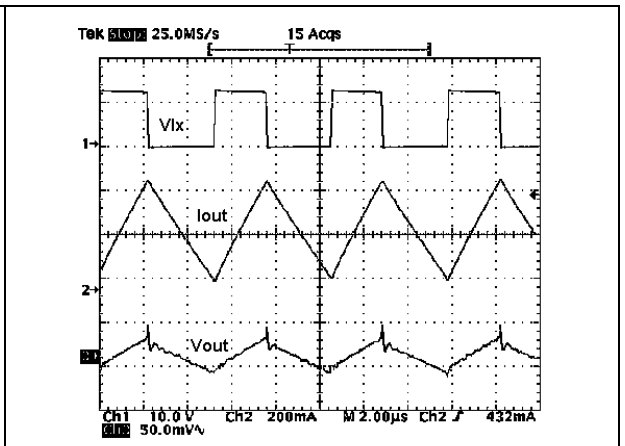

V_I = 6V to 11V, I_O = 300mA

Figure 12. Line transient

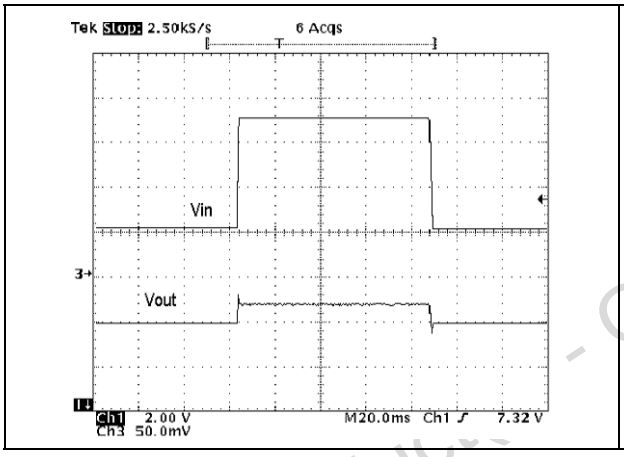

Figure 13. Load transient

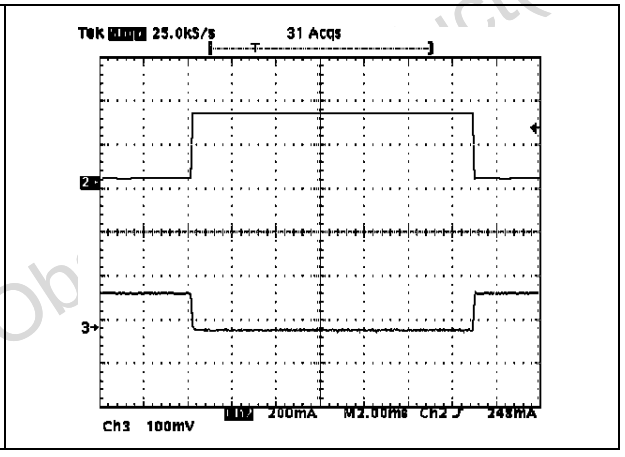

Obsolete Product(s) - Obsolete Product(s)

7 Package mechanical data

In order to meet environmental requirements, ST offers these devices in ECOPACK® packages. These packages have a Lead-free second level interconnect. The category of second Level Interconnect is marked on the package and on the inner box label, in compliance with JEDEC Standard JESD97. The maximum ratings related to soldering conditions are also marked on the inner box label. ECOPACK is an ST trademark. ECOPACK specifications are available at: www.st.com.

Obsolete Product(s) - Obsolete Product(s)

SO-8 MECHANICAL DATA

DIM.	mm.			inch		
	MIN.	TYP	MAX.	MIN.	TYP.	MAX.
A	1.35		1.75	0.053		0.069
A1	0.10		0.25	0.04		0.010
A2	1.10		1.65	0.043		0.065
B	0.33		0.51	0.013		0.020
C	0.19		0.25	0.007		0.010
D	4.80		5.00	0.189		0.197
E	3.80		4.00	0.150		0.157
e		1.27			0.050	
H	5.80		6.20	0.228		0.244
h	0.25		0.50	0.010		0.020
L	0.40		1.27	0.016		0.050
k	8° (max.)					
ddd			0.1			0.04

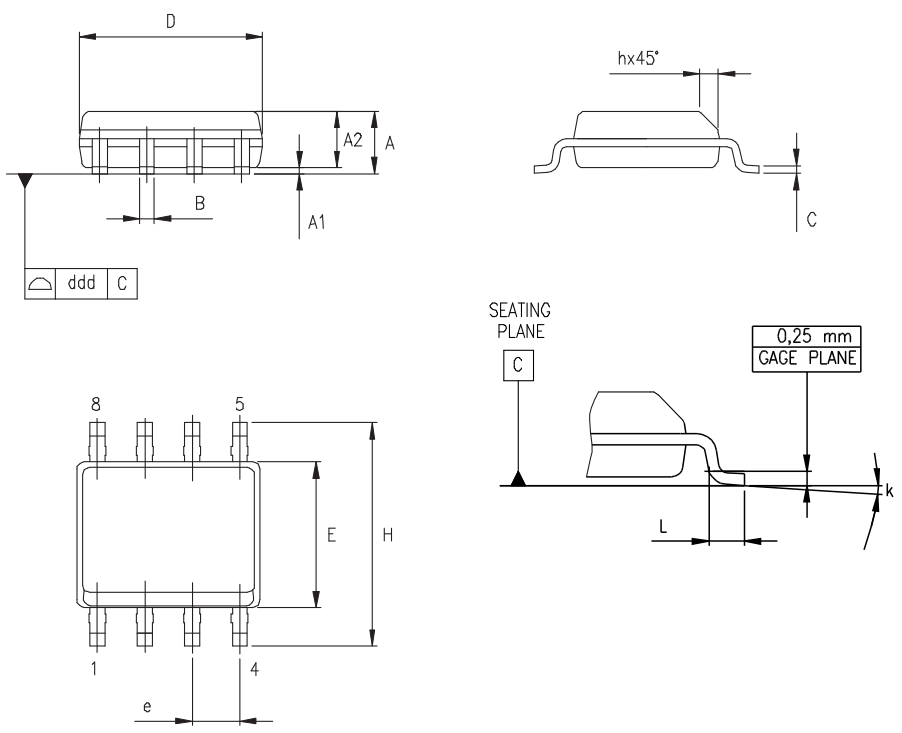

0016023/C

Tape & Reel SO-8 MECHANICAL DATA

DIM.	mm.			inch		
	MIN.	TYP	MAX.	MIN.	TYP.	MAX.
A			330			12.992
C	12.8		13.2	0.504		0.519
D	20.2			0.795		
N	60			2.362		
T			22.4			0.882
Ao	8.1		8.5	0.319		0.335
Bo	5.5		5.9	0.216		0.232
Ko	2.1		2.3	0.082		0.090
Po	3.9		4.1	0.153		0.161
P	7.9		8.1	0.311		0.319

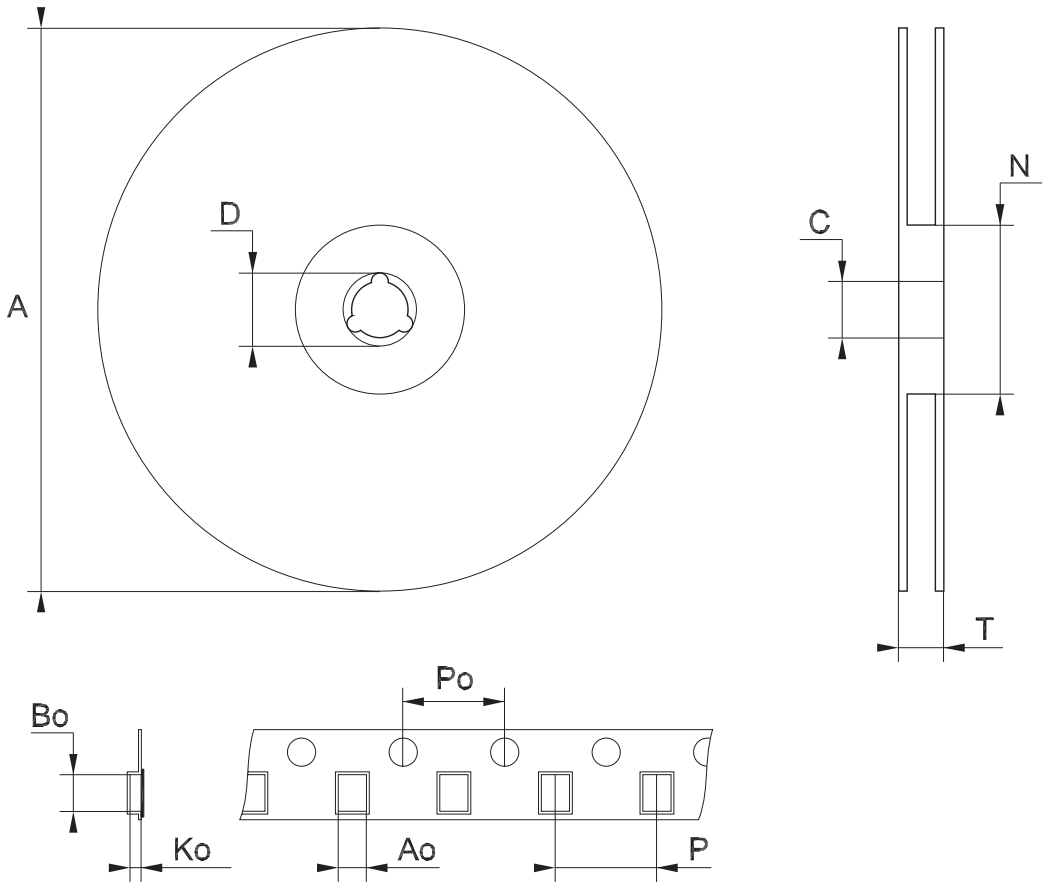

Note: Drawing not in scale

8 Revision history

Table 5. Revision history

Date	Revision	Changes
29-May-2007	3	Order code has been updated and the document has been reformatted.

Obsolete Product(s) - Obsolete Product(s)

Please Read Carefully:

Information in this document is provided solely in connection with ST products. STMicroelectronics NV and its subsidiaries (“ST”) reserve the right to make changes, corrections, modifications or improvements, to this document, and the products and services described herein at any time, without notice.

All ST products are sold pursuant to ST’s terms and conditions of sale.

Purchasers are solely responsible for the choice, selection and use of the ST products and services described herein, and ST assumes no liability whatsoever relating to the choice, selection or use of the ST products and services described herein.

No license, express or implied, by estoppel or otherwise, to any intellectual property rights is granted under this document. If any part of this document refers to any third party products or services it shall not be deemed a license grant by ST for the use of such third party products or services, or any intellectual property contained therein or considered as a warranty covering the use in any manner whatsoever of such third party products or services or any intellectual property contained therein.

UNLESS OTHERWISE SET FORTH IN ST’S TERMS AND CONDITIONS OF SALE ST DISCLAIMS ANY EXPRESS OR IMPLIED WARRANTY WITH RESPECT TO THE USE AND/OR SALE OF ST PRODUCTS INCLUDING WITHOUT LIMITATION IMPLIED WARRANTIES OF MERCHANTABILITY, FITNESS FOR A PARTICULAR PURPOSE (AND THEIR EQUIVALENTS UNDER THE LAWS OF ANY JURISDICTION), OR INFRINGEMENT OF ANY PATENT, COPYRIGHT OR OTHER INTELLECTUAL PROPERTY RIGHT.

UNLESS EXPRESSLY APPROVED IN WRITING BY AN AUTHORIZE REPRESENTATIVE OF ST, ST PRODUCTS ARE NOT DESIGNED, AUTHORIZED OR WARRANTED FOR USE IN MILITARY, AIR CRAFT, SPACE, LIFE SAVING, OR LIFE SUSTAINING APPLICATIONS, NOR IN PRODUCTS OR SYSTEMS, WHERE FAILURE OR MALFUNCTION MAY RESULT IN PERSONAL INJURY, DEATH, OR SEVERE PROPERTY OR ENVIRONMENTAL DAMAGE.

Resale of ST products with provisions different from the statements and/or technical features set forth in this document shall immediately void any warranty granted by ST for the ST product or service described herein and shall not create or extend in any manner whatsoever, any liability of ST.

ST and the ST logo are trademarks or registered trademarks of ST in various countries.

Information in this document supersedes and replaces all information previously supplied.

The ST logo is a registered trademark of STMicroelectronics. All other names are the property of their respective owners.

© 2007 STMicroelectronics - All rights reserved

STMicroelectronics group of companies

Australia - Belgium - Brazil - Canada - China - Czech Republic - Finland - France - Germany - Hong Kong - India - Israel - Italy - Japan - Malaysia - Malta - Morocco - Singapore - Spain - Sweden - Switzerland - United Kingdom - United States of America

www.st.com